TECHNICAL DATA

Three Phase Electric Motors - Aluminum Frame
PE31 112M-6
2.2 kW / 3.0 Cv
950 RPM

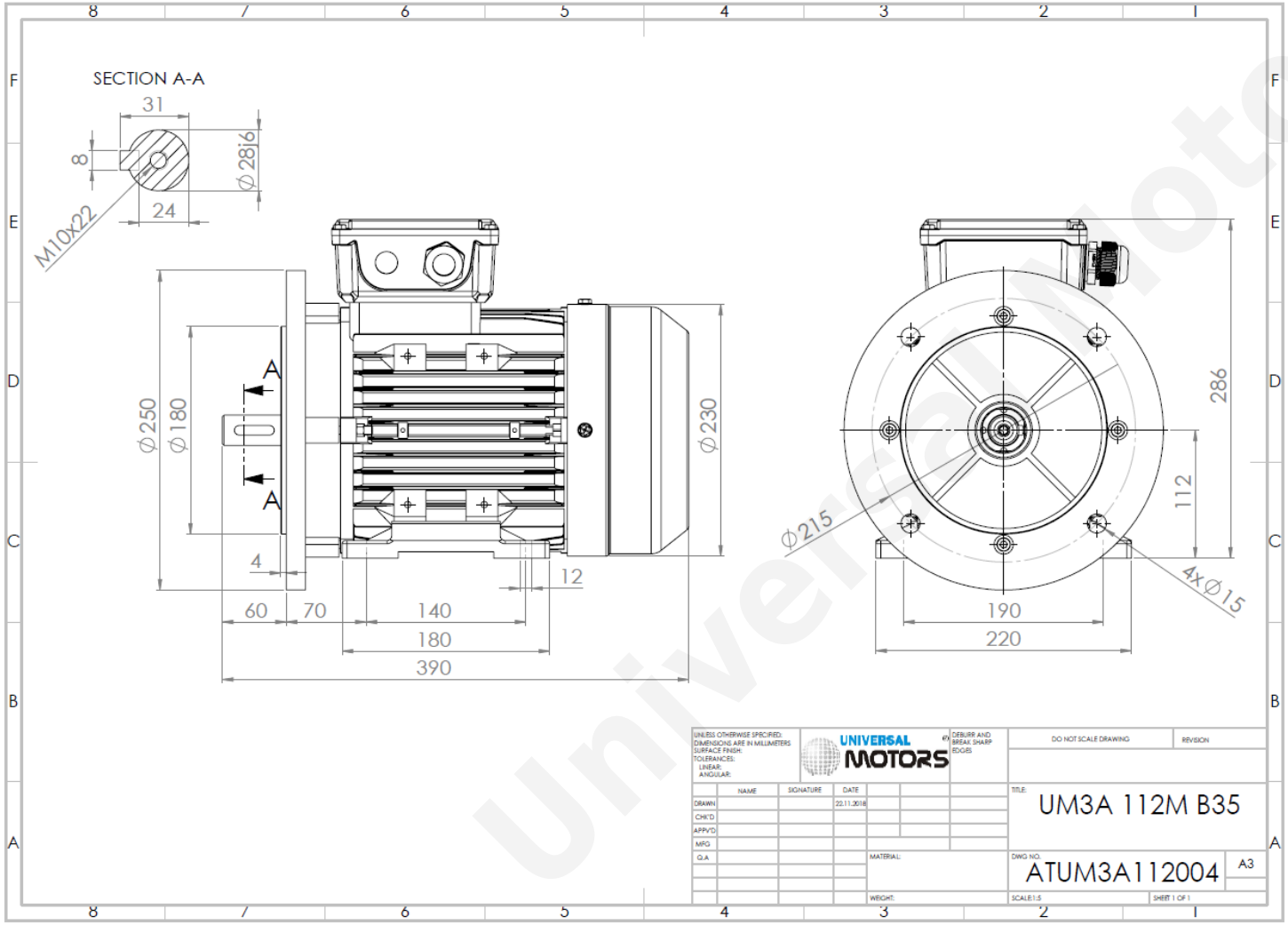

Motor type:	**PE31 112M-6**
Output:	**2.2 kW / 3.0 Cv**
Speed (min^{-1}):	**950 RPM**
Frequency:	**50 Hz**
Voltage:	**400 V**
Current:	**5.1 A**
Power factor (Cos Ø):	**0.74**
Poles:	**6**
Insulation class:	**F**
Temperature rise Class:	**B**
Efficiency 50%:	**82.2 %**
Efficiency 75%:	**84.5 %**
Efficiency 100%:	**84.3 %**
Torque:	**22.1 N.m**
Tstarting/Tnominal:	**2.1**
Istarting/Inominal:	**6.0**
Tmaximum/Tnominal:	**2.1**
Noise:	**64 Db(A)**
Weight:	**28.0 Kg**
Bearing DE:	**6306 2Z C3**
Bearing NDE:	**6306 2Z C3**

Regime - S1 **Altitude - 1000m** **Environment Temperature - 40ºC**

* References applied only in the UK

CONTACTS:

UNIVERSAL MOTORS
Rua de São Brás,745
4480-782 VILA DO CONDE

Tel: +351 252 299 080
Fax: +351 252 299 089
Mail: geral@universalmotors.pt

Universal Motors